❑ PV2R123-Series Triple Vane Pumps

These triple pumps consist of one PV2R1, one PV2R2 and one PV2R3 series single pumps combined in tandem within a single housing and driven by a common shaft. Fluid delivered from the three separate ports can be either supplied to separate or common circuits. These pumps are used in machine tools application.

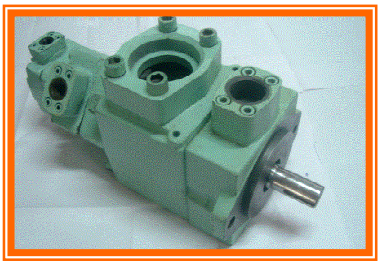

Graphical Symbol

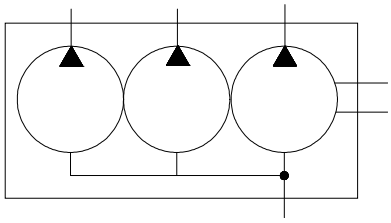

❑ Ratings

Model Number	Small Volume pump Geometric Displacement cc/rev	Medium Volume pump Geometric Displacement cc/rev	Large Volume pump Geometric Displacement cc/rev	Max. Oper. Pressure Kgf/cm^2	Output Flow and Input Power	Shaft Speed Range RPM		Mass kg.	
						Max	Min.	Flange Mounting	Foot Mounting
PV2R123	Refer Ratings in page No. 2/2	Refer Ratings in page No. 2/2	Refer Ratings in page No. 2/2	210	Refer Page No. 2/2	2000	600	60	70

❑ Model Number Designation

PV2R123	-L	-F	-23	53	76-	-R	A	E	A	A	42
Series Number	Mounting	Type of Pipe Connection	Small Volume Pump Capacity Designation	Medium Volume Pump Capacity Designation	Large Volume Pump Capacity Designation	Direction of Rotation	Small Volume Pump Discharge position	Medium Volume Pump Discharge position	Large Volume Pump Discharge Position	Suction Port Position	Design No.
PV2R123	**L:** Foot: Mounting **F:** Flange Mounting	**F:** Flange Attachment	23,	**53,**	**76**	**R:** Clockwise (Normal) **L:** Counter Clockwise	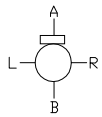		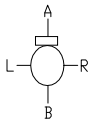	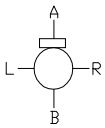	**- 42**

*Mounting details

Flange Mtg: PV2R123-*-*-*-F-*****-42

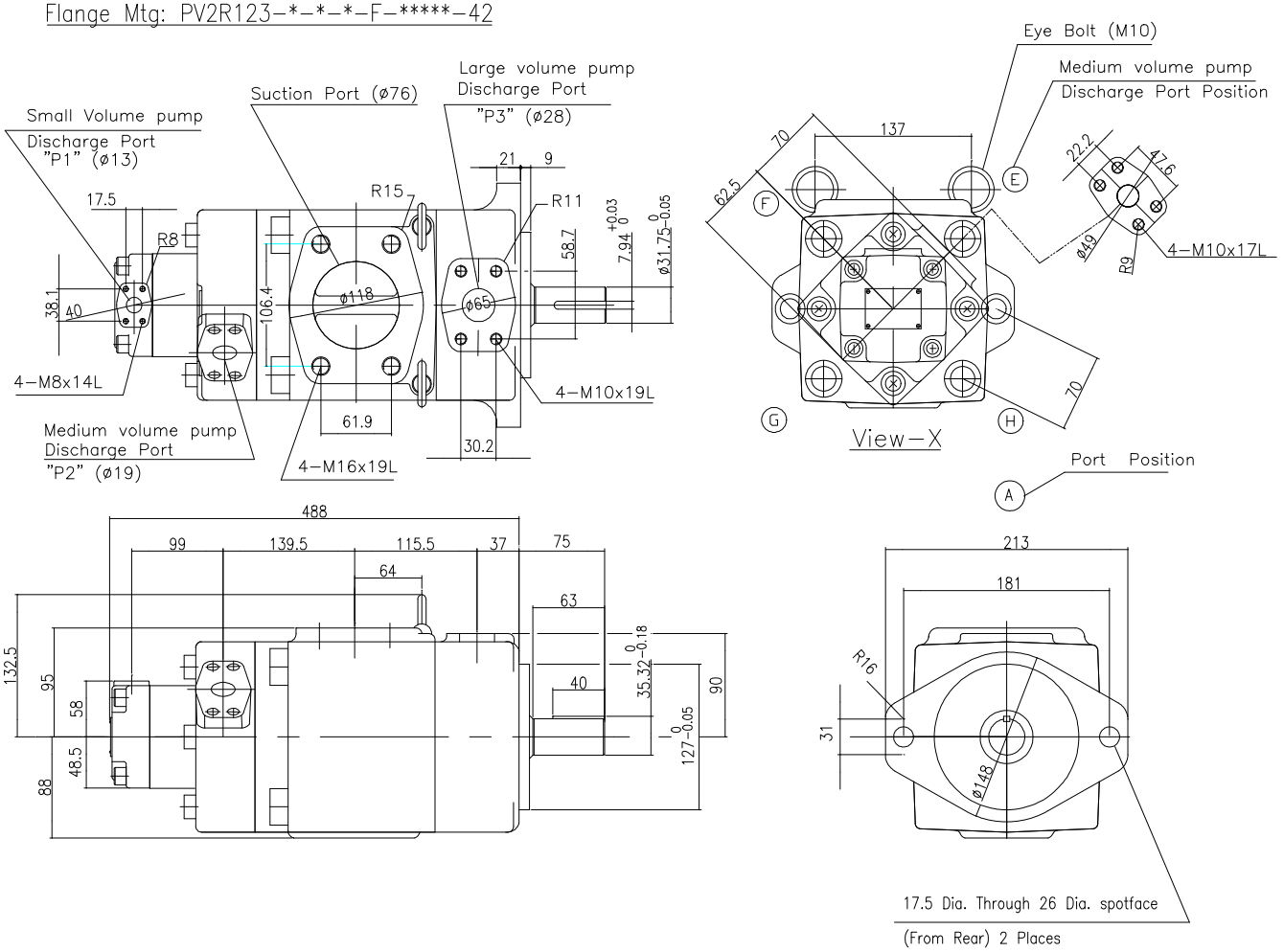

Flange Mtg: PV2R123-*-*-*-L-*****-42

ALL DIMENSIONS IN MILLIMETERS

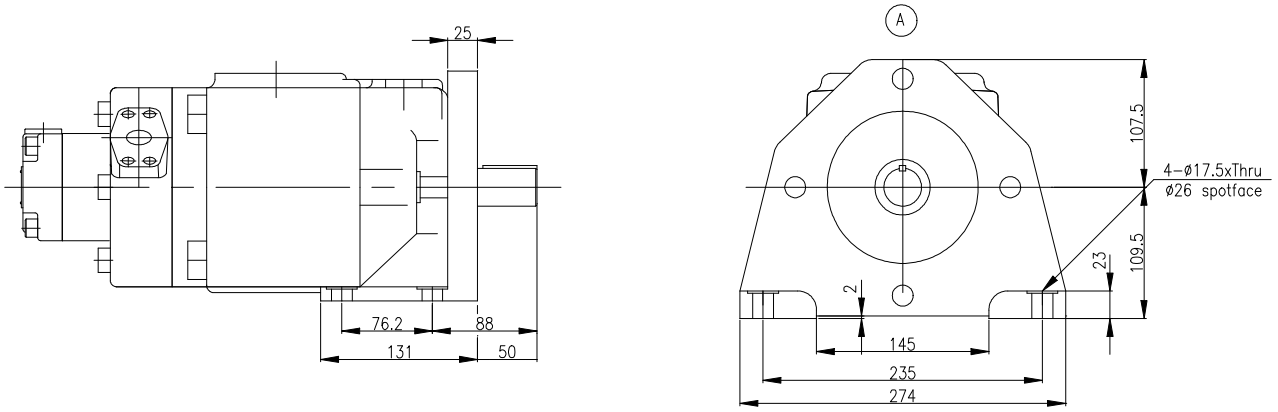

$ for other dimensions, refer to "Flange Mtg."

Ratings

Model Number	Geometric Displacement cc/rev	Max. Oper. Pressure Kgf/cm^2	Output Flow & Input Power	Shaft Speed Range RPM	
				Max.	Min.
PV2R1-23	22.7	210		2000	600
PV2R2-53	52.5				
PV2R3-76	76.4				
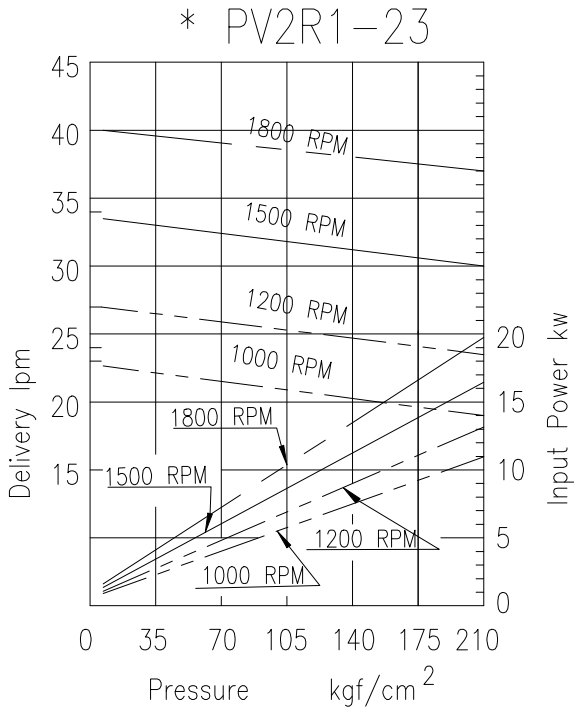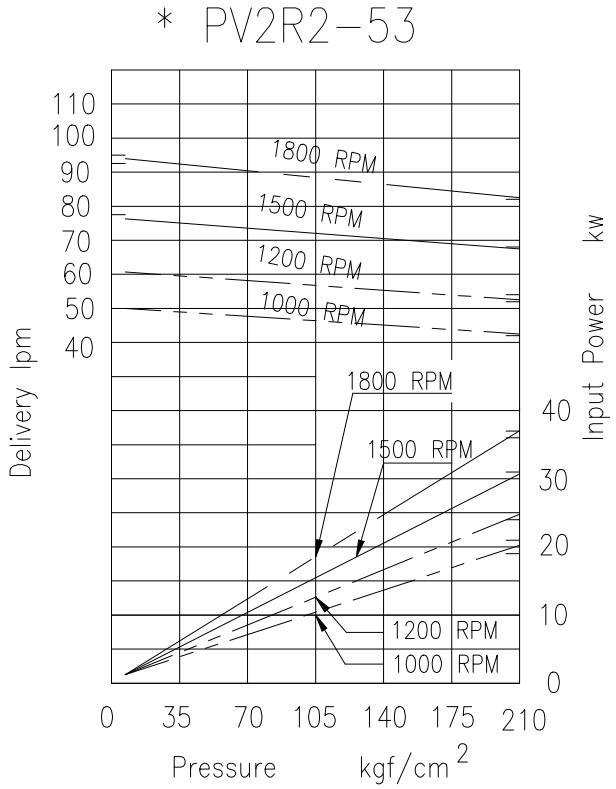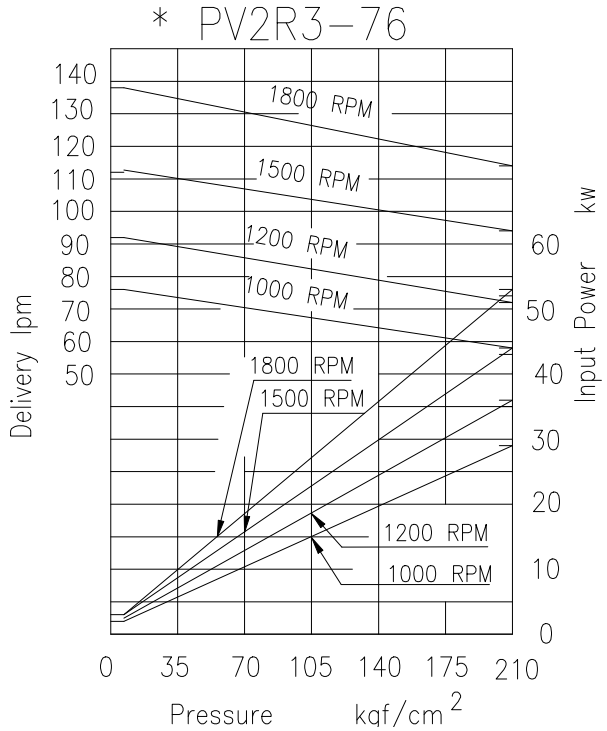
Typical pump characteristics at viscosity 20 cst temp 50^{0}C